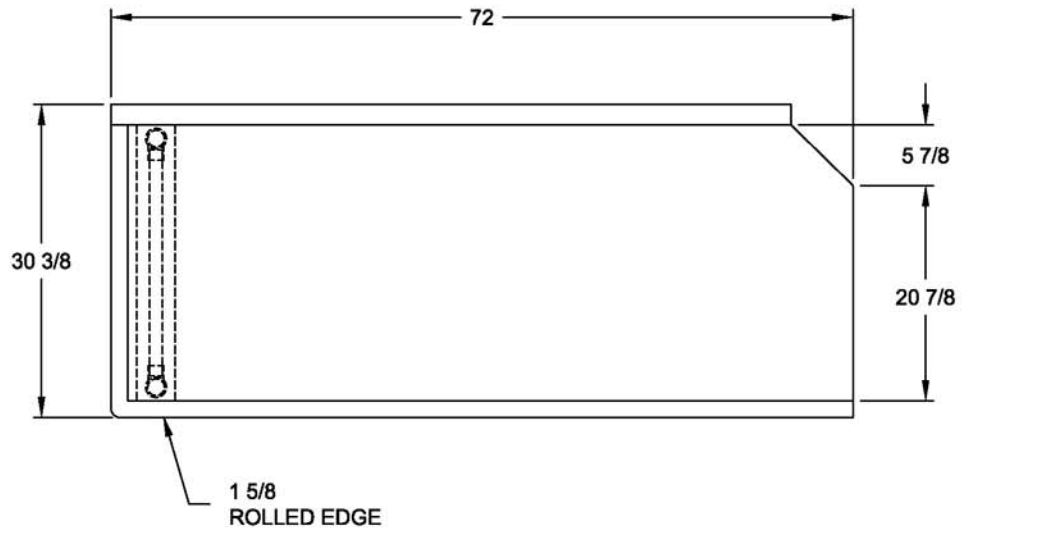

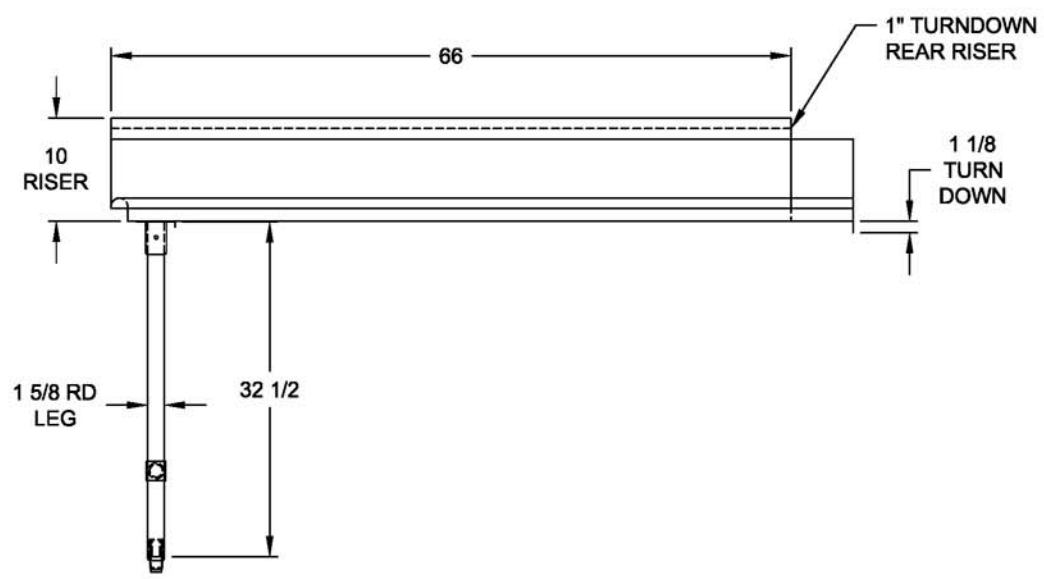

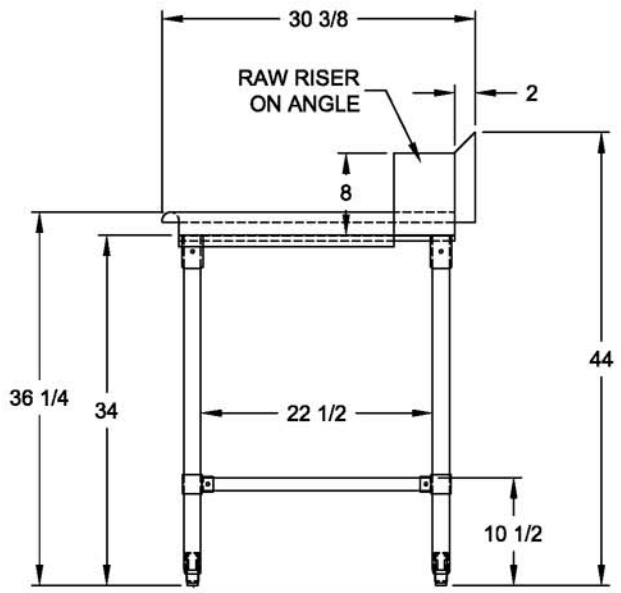

DRAWN FOR:	MAT.	TOP: 18 GA. SS BASE: GALVANIZED	REVISIONS
REF. NO.	REQ'D/ITEM		
ITEM NAME:	DATE: 4-3-02		
PROD. NO. BKCDT-72-L	BY: J.K.		
SCALE:	CHECKED BY:		

BK Resources